| Pos. | Title | Identification number |
|---|---|---|
| | Dimension Drawing (mm/inch) MS165 | 1SAM400401 F... |
| | | |

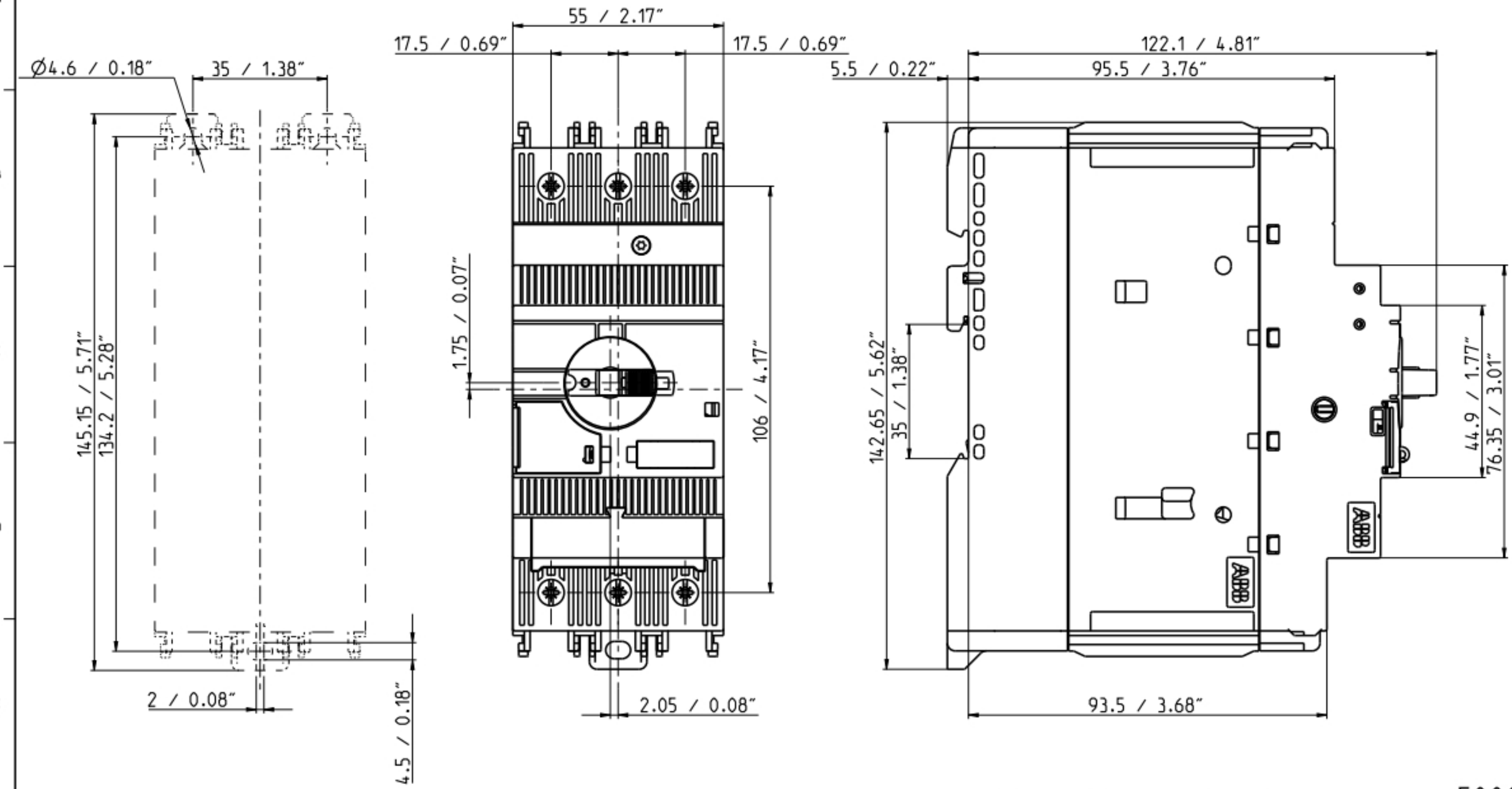


Changes of dimensions reserved.

F0001

| | | | | | |
|---|---|---|---|---|---|
| Created by | Jet-Jie Tan | Checked by | Simon-GuangQiang Wang | Approved by | Guido Niewoehner |
| Created on | 28-Oct-14 09:32:46 AM | Checked on | 2014-10-29 | Approved on | 2014-10-30 |
| ECN number | 000025806 ECN date | 31-Oct-14 | Department PT | Scale | 1:2 |
| Revision index | A PRU | DESTO | | | |
| Partname | 1SAM400401 A.2 | | Drawing | 1SAM400401 A.9 | |

| | | | | | |
|---|---|---|---|---|---|
| Title (zh) | 外形尺寸图 (毫米/英寸) MS165 | Format | Language | Sheet No. | No. Sheets |
| | | A3 | zh/en | 01 | 01 |
| Title (en) | Dimension Drawing (mm/inch) MS165 | 1SA M40 0401 | | | |

Tolerancing ISO 8015
ISO 2768 - mK


保密文件， 经手人赋有保密义务； 未经授权而披露， 权利人享有追偿权利

**Proprietary and Secret Information**

Fuer dieses Dokument und den darin dargestellten Gegenstand behalten wir uns alle Rechte vor. Vervielfaeltigung, Bekanntgabe an Dritte oder Verwertung seines Inhalts sind ohne unsere ausdrückliche Zustimmung verboten.© Copyright 2014 ABB.

We reserve all rights in this document and in the information contained therein. Reproduction, use or disclosure to third parties without express authority is strictly forbidden.© Copyright 2014 ABB.